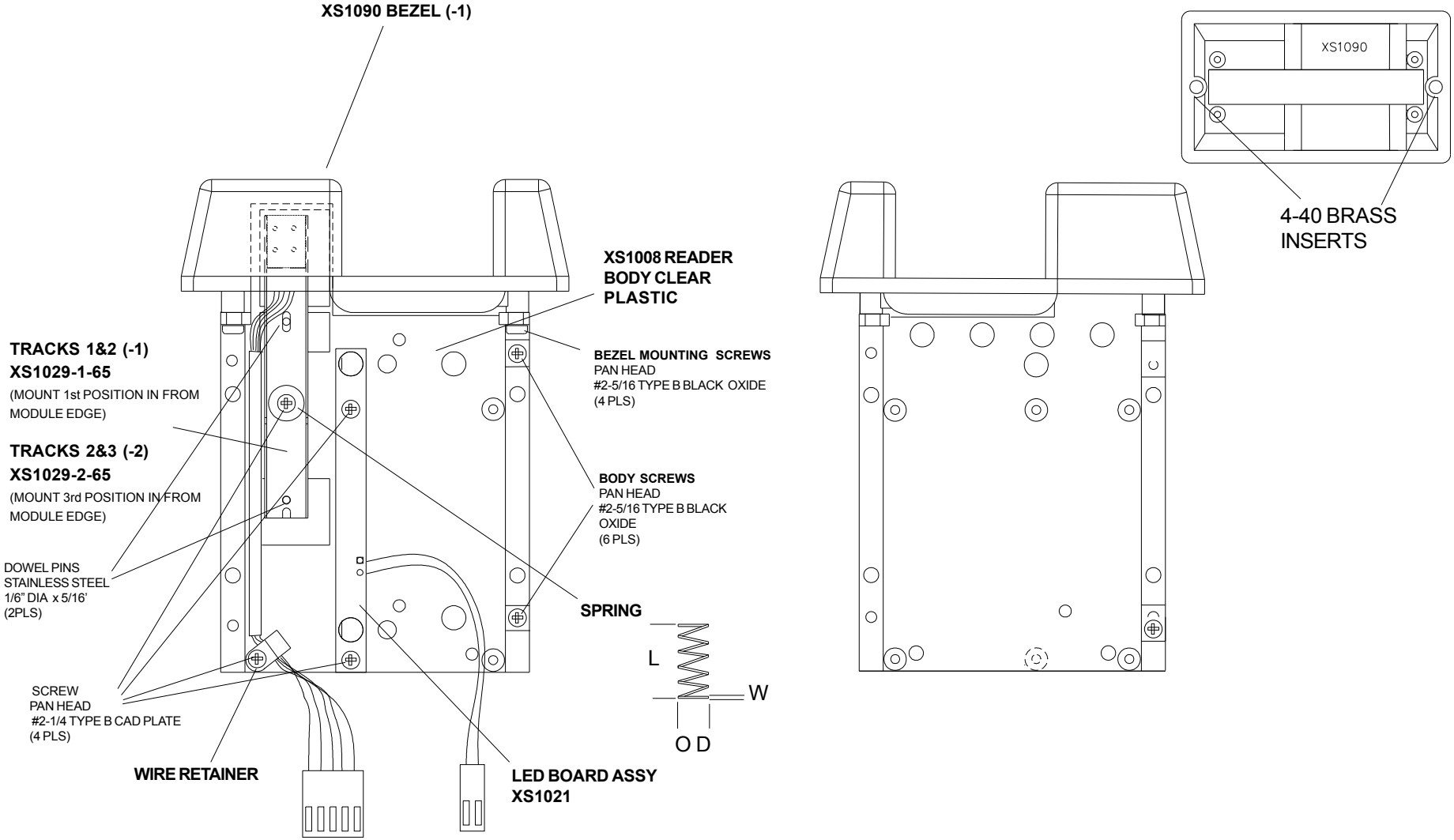# Mounting Diagram for Series FI30